TOWN OF TROPHY CLUB

RESIDENTIAL BUILDING PERMITS

100 MUNICIPAL DRIVE
TROPHY CLUB, TEXAS 76262
(682) 831-4680 FAX (817) 490-0705
www.trophyclub.org

Town of Trophy Club
100 Municipal Drive
Trophy Club, TX 76262
682.831.4680

TOWN OF TROPHY CLUB

Permit # _____

Legal Description

Project Address _____ Lot _____ Block _____

Subdivision _____ Zoning District _____

Type of Work

☐ **New Single Family**
Total s.f. under roof _____
(fire sprinkler is required if over 6000 s.f.)
Estimated Value $ _____
Masonry % _____
(80% Minimum)
Roofing Material _____

☐ **Accessory Structure**
☐ **Addition**
☐ **Alteration/Remodel**
Description of proposed work: _____
_____
Total square feet _____
Estimated Value $ _____

Set Backs (actual distances from property lines)

Lot size _____ s.f. Front _____ Rear _____ L. Side _____ R. Side _____

Is area within the floodplain? No ☐ Yes ☐ If yes, Floodplain Development Permit Application must be submitted

General Contractor Information

Name _____
Address _____
City, St, Zip _____
Phone _____
Supervisor _____
Phone _____
Email _____

Subcontractor Information

Electrician _____
Phone _____
Plumber _____
Phone _____
Mechanical _____
Phone _____
Foundation _____
Phone _____

FENCE/RETAINING WALL (select all that apply)

☐ Fence ☐ Wood ☐ Wrought Iron ☐ Brick ☐ Other
☐ Ret. Wall ☐ Masonry ☐ Pavestone ☐ Stone

Height of fence _____ Retaining Wall _____ (if 4' and over, submit engineers letter)

*Exact measurements & placement of all fences/retaining walls must be shown on site plan
*All fences & retaining walls must comply with Comprehensive Zoning Ordinance Sec. 45

PERMIT BECOMES NULL AND VOID IF WORK OR CONSTRUCTION AUTHORIZED IS NOT COMMENCED WITHIN 180 DAYS, OR IF CONSTRUCTION OR WORK IS SUSPENDED OR ABANDONED FOR A PERIOD OF 180 DAYS AT ANY TIME AFTER WORK HAS COMMNECED. ALL PERMITS REQUIRE FINAL INSPECTION PRIOR TO OCCUPYING THE RESIDENCE. I HEREBY CERTIFY THAT I HAVE READ AND EXAMINED THIS APPLICATION AND KNOW THAT THE SAME TO BE TRUE AND CORRECT. ALL PROVISIONS OF LAWS AND ORDINANCES GOVERNING THIS TYPE OF WORK, INCLUDING BUT NOT LIMITED TO BUILDING, FIRE, ZONING, STORM WATER AND TREE PRESERVATION ORDINANCES SHALL BE COMPLIED WITH WHETHER SPECIFIED OR NOT. THE GRANTING OF A PERMIT DOES NOT PRESUME TO GIVE AUTHORITY TO VIOLATE OR CANCEL THE PROVISIONS OF ANY STATE OR LOCAL LAW REGULATING CONSTRUCTION OR THE PERFORMANCE OF CONSTRUCTION. I AUTHORIZE THE BUILDING OFFICIAL TO DISCONTINUE ANY OR ALL UTILITY SERVICES FOR DUE CAUSE.

AS PER CHAPTER 8, SECT 101 OF THE CODE OF ORDINANCES, NO CONSTRUCTION WORK SHALL BEGIN BEFORE 7:00 A.M. NOR EXCEED BEYOND 6:00 P.M. NO CONSTRUCTION WORK ON SUNDAY.

Name of Builder

Please Print _____ Signature _____
Address _____
Phone _____ Fax _____ Date _____

STAFF DIRECTORY

Pat Cooke
Building Official
682.831.4684

Tommy Uzee
Building Inspector
682-831-4612

Ron Powell
Permit Official
682.831.4680

Rick Lasky
Fire Marshal
682.831.4653

Office hours: 8:00 a.m. – 5:00 p.m.
Closed 12:00 p.m. to 1:00 p.m.
Monday through Friday,
excluding holidays.

PERMIT SUBMITTAL REQUIREMENTS

THE GENERAL CONTRACTOR IS REQUIRED TO PULL ALL PERMITS FOR THEIR LICENSED SUB-CONTRACTORS. ALL SUB-CONTRACTORS MUST BE CURRENTLY REGISTERED WITH THE TOWN.

CD Must Include The Following Information:

- Building plans scaled to 11X17.
- 8 ½ x 14 plot plans showing erosion control plan, flow of drainage, building lines, utility easements, landscape plan, fence plan, dimensions of the slab.
- Residential building permit application.
- Engineered foundation plans with seal and signature.
- Residential lots shall have a landscape plan. You will be required to submit the appropriate minimum requirements for the landscaping, dependent upon if you are building in a straight-zoned district or a planned development.
- As per Chapter 13, Art IV, Sect 5.09 of the Code of Ordinances - Tree placement and size must be noted on site plan.
- Fence permits must have an accompanying plot plan with the fence area highlighted.
- Fire Sprinkler System - Automated Fire Sprinkler Systems are required when the square footage under roof of the house meets or exceeds 6000 square feet. The Town of Trophy Club performs the plan review and all inspections on fire suppression. Contact the Permitting Department for details.
- Energy Code Compliance Review (http://ic3.tamu.edu/) or energy star

Miscellaneous Information

- Leaving trees, except for those needing removed from under the foundation, is encouraged.
- Prior to the rough plumbing inspection, a form survey must be submitted and reviewed by the Planning & Zoning Coordinator. The form survey must be stamped by a certified surveyor and must show all the measurements from the structure to the property lines. The Builder is responsible for this requirement. The Building Department will not give any references for surveyors.
- Fences will have a separate inspection. YOU ARE RESPONSIBLE FOR KNOWING THE FENCE REQUIREMENTS IN YOUR SECTION. If the fence erected is in any violation of the fence ordinance, YOU WILL BE RESPONSIBLE FOR BRINGING YOUR FENCE INTO COMPLIANCE. By signing the fence permit application, you agree to comply with the Town of Trophy Club's fence requirements, and you will be held responsible.
- Meter release applications must be filled out and returned to the Permitting Department prior to the inspection request.
- CODES: For a complete list of building construction requirements, refer to the following code books and the adopting ordinances:

2015 International Building Code	2015 International Residential Code
2014 National Electrical Code	2015 International Mechanical Code
2015 International Plumbing Code	2015 International Energy Code
2015 International Fire Code	2009 International Property Maintenance Code

REQUIRED INSPECTIONS

- **T-POLE**
- **PLUMBING ROUGH**
  (An approved form survey must be on site and in our possession at time of inspection)
- **FOUNDATION**
  Piers, (if applicable). An engineer's letter for pier inspection is acceptable.
- **SECONDS**
  Includes: Framing, Mechanical & Electrical Rough, Plumbing Top-out, Wall Tie, and Fireplace.
- **INSULATION**
- **APPROACH**
- **GAS & ELECTRICAL PERM**
- **FINAL**
  Includes: Building, Mechanical, Electrical, Plumbing, Irrigation and Fence.
    - At the time of building final a grading certificate must be completed and on site.
    - Termite treatment certificate must be present if not picked up earlier.
    - Irrigation permit must be issued and inspected and a backflow test performed at this time as well.

* Erosion control shall be placed and maintained throughout the entire building process.
* Dirt on streets to be cleaned daily.
* Trash container provided by Allied Waste to be on site for refuse removal.
* Builder shall provide a portable restroom for workers.

EROSION CONTROL

Approved erosion control devices must be used to keep all soil on the construction site, out of streets, and off of adjoining property/s. Erosion control devices must be installed before beginning any grading or earthwork and up until a final inspection has been approved or after sod has been placed prior to the final inspection.

Silt/Sediment Fencing:

1. Galvanized steel, fir, pine or T-posts, which support the silt fence, shall be installed on a slight angle toward the anticipated runoff source and parallel to the contour of the land to allow water to pond behind barrier.
2. The toe of the silt fence shall be trenched in with a spade or mechanical trencher so that the down slope face of the trench is flat and perpendicular to the line of flow. Where fence cannot be trenched in (e.g. pavement), weight fabric flap with rock on uphill side to prevent flow from seeping under fence.
3. The trench must be a minimum of eight inches (8”) deep (preferably 1’) and six-inches (6”) wide to allow for the silt fence fabric to be laid in the ground and backfilled with compacted material.
4. The fence post should be installed twenty inches (20”) above the ground and should be spaced not more than six feet (6’) on center on downside of fabric.
5. Silt fence should be securely fastened to each steel support post, which in turn is attached to the steel fence post.
6. Fabric shall overlap at abutting ends a minimum of three-feet (3’), and shall be joined such that no leakage or bypass occurs.
7. Minimum acceptable wire support shall be W1.4 x W1.4, 4” x 4”, zinc coated (galvanized) steel, 14-gauge wire fence fabric and standard 2” x 2” chain link fence.
8. Inspection shall be made every two (2) weeks and after each ½” (one-half inch) rainfall. Repair of replacement shall be made promptly as needed.
9. Silt fence shall be removed when the site is completely stabilized so as not to block or impede storm flow or drainage.
10. Accumulated silt shall be removed when it reaches a depth of half the height of the fence. The silt shall be disposed of at an approved site and in such a manner as to not contribute to additional siltation.
11. Erosion control blankets will be necessary on slopes with gradients over 3:1.

Construction Entrance/Exit:

1. Gravel, stone material, Type-A riprap, or aggregate at least 3-inches thick.
2. Stabilized gravel entrances shall be installed at the beginning of construction and maintained for the duration of the project.
3. Additional measures may be required to insure that all paved areas are kept clean for the duration of the project.

Soil Piles:

1. Locate away from down-slope streets, driveways, streams, or drainage ways and away from vehicle parking and traffic.
2. Shall be protected from erosion onto streets, streams, etc.

Regular Cleanup:

1. Cleanup of any soil tracked onto streets and return to jobsite.
2. After a rain event, cleanup of soil washed off jobsite.

REQUIRED INFORMATION FOR EROSION CONTROL PLANS

1. Name, address, and telephone number of parties responsible for the plan.
2. Location of proposed building site with property lines delineated
3. Existing and proposed contour lines (if grading)
4. Location of erosion control measures
5. Details of erosion control measures:
   a. Location for storage of excavated materials
   b. Containment of waste generated at site
   c. Soil Piles
   d. Regular cleanup
   e. Construction entrance/exit
   f. Additional measures may be required to insure that all paved areas are kept clean for the duration of the project.
6. Drainage plan with details of drainage control devices
   a. Silt fencing
   b. Wire-backed silt fencing - slopes
   c. Erosion control blanket – steep slopes
   d. Inlet protection - location of nearest storm drain inlet and how it is protected.
   e. Accumulated silt
   f. Limits of disturbance
   g. Proposed construction schedule
   h. Revegetation plan
   i. Show measures for removal of all erosion control measures when vegetation is fully established and/or site is completely stabilized so as not to block or impede storm flow or drainage.

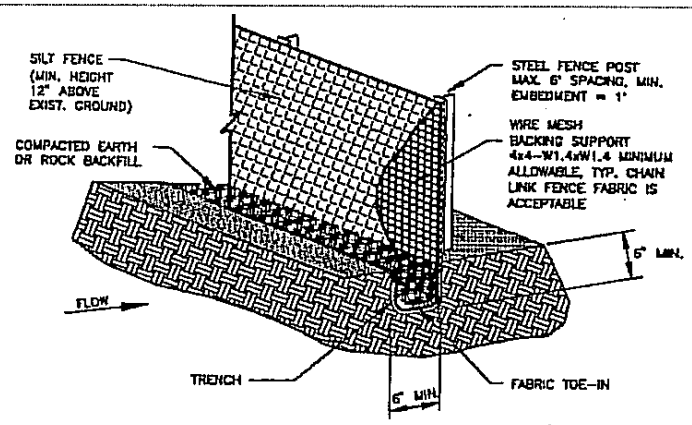

Typical Silt Screening Fence

SAMPLE EROSION/SEDIMENT CONTROL PLAN FOR A SINGLE FAMILY RESIDENCE UNDER CONSTRUCTION

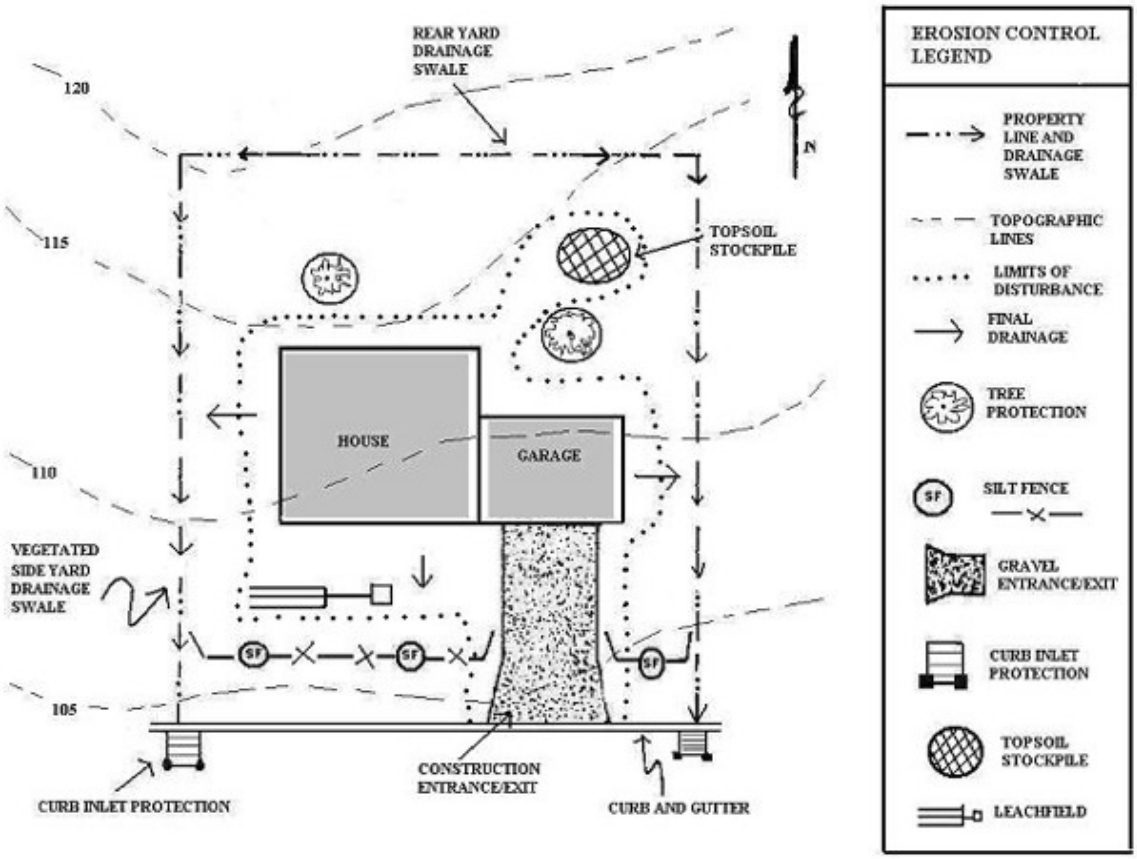

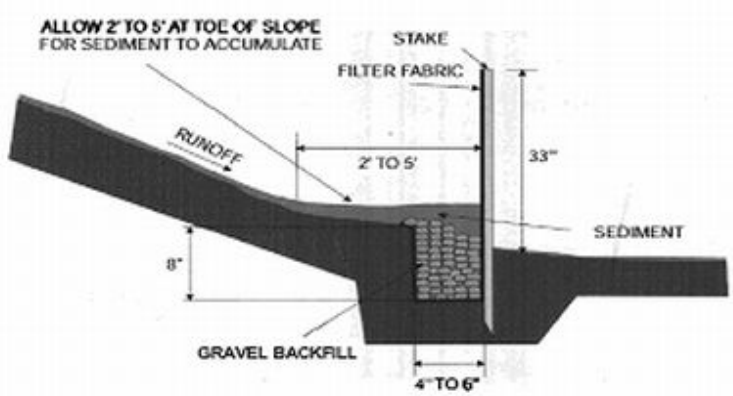
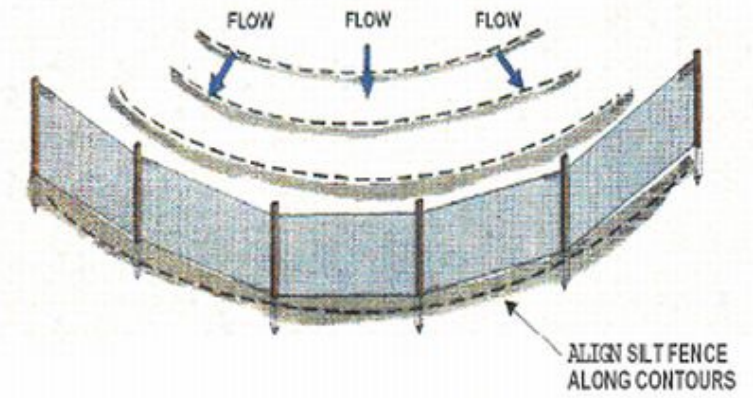
RECOMMENDED INSTALLATION OF SILT FENCE